LTR	ECO NO	REVISION	BY	DATE	APPD

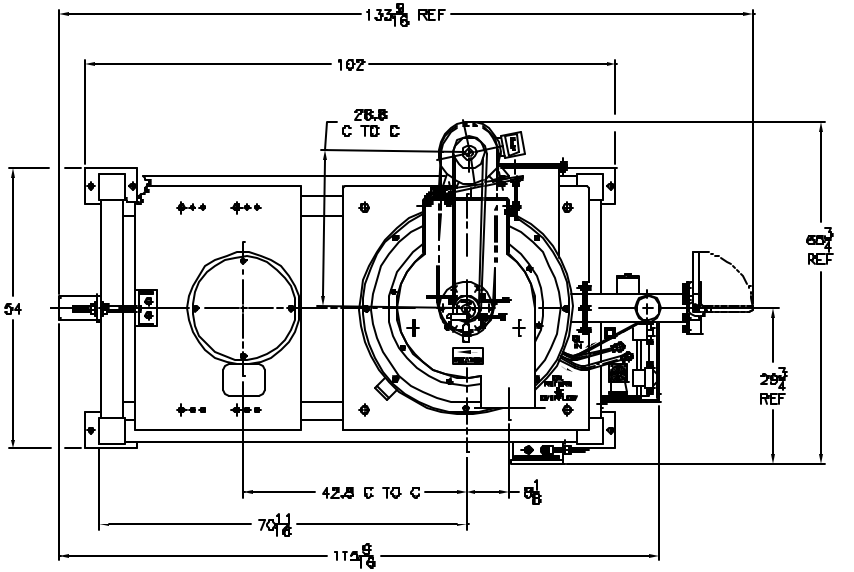

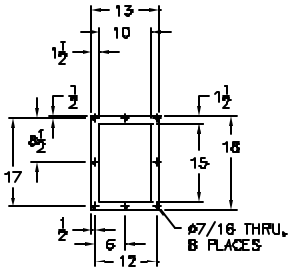

VIEW A–A
PRODUCT DISCHARGE

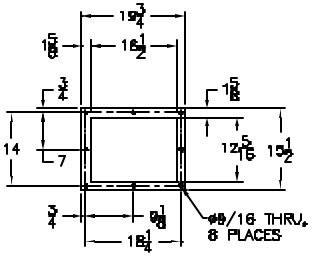

VIEW B–B
AIR INLET

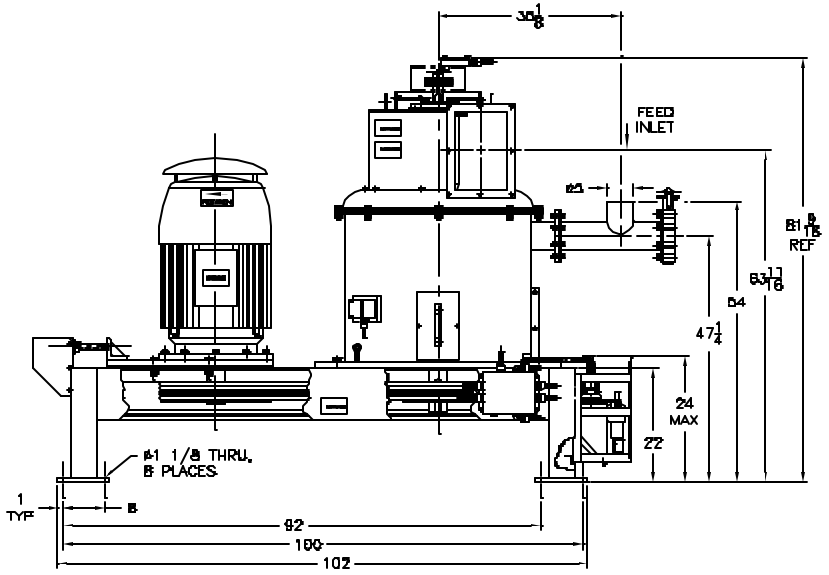

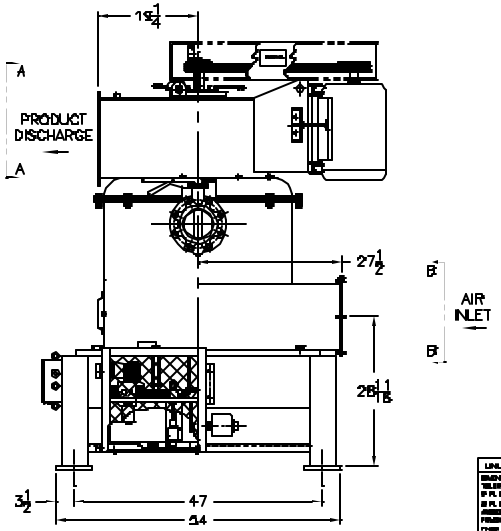

The subject matter disclosed herein includes proprietary information which is the confidential property of STURTEVANT, INC. none of which shall be copied, reproduced, released to others, published, or used in whole or in part, for any purpose other than that for which it is being made available without the express written permission of STURTEVANT, INC. Any additional copies of this drawing, if any, remain the property of STURTEVANT, INC. and are to be returned to the company upon request.

UNLESS OTHERWISE SPECIFIED	SIGNATURE	DATE	STURTEVANT
DIMENSIONS IN INCHES TOLERANCES: F.R. DECIMALS ± .02 B.R. DECIMALS ± .005 ANGLES ± 1/2° FRACTIONALS ± 1/32 FINISH 125	DRAWN SGE	6/17/81	TITLE #3 POWDERIZER
MATERIAL SEE ABOVE	CHECKED		SIZE B — FC-100
	APPROVED		
	MFG		
	QUALITY		
	COMPANY GENERAL ARRANGEMENT		NET 7000 Use APPROX. — SHEET 1 OF 1