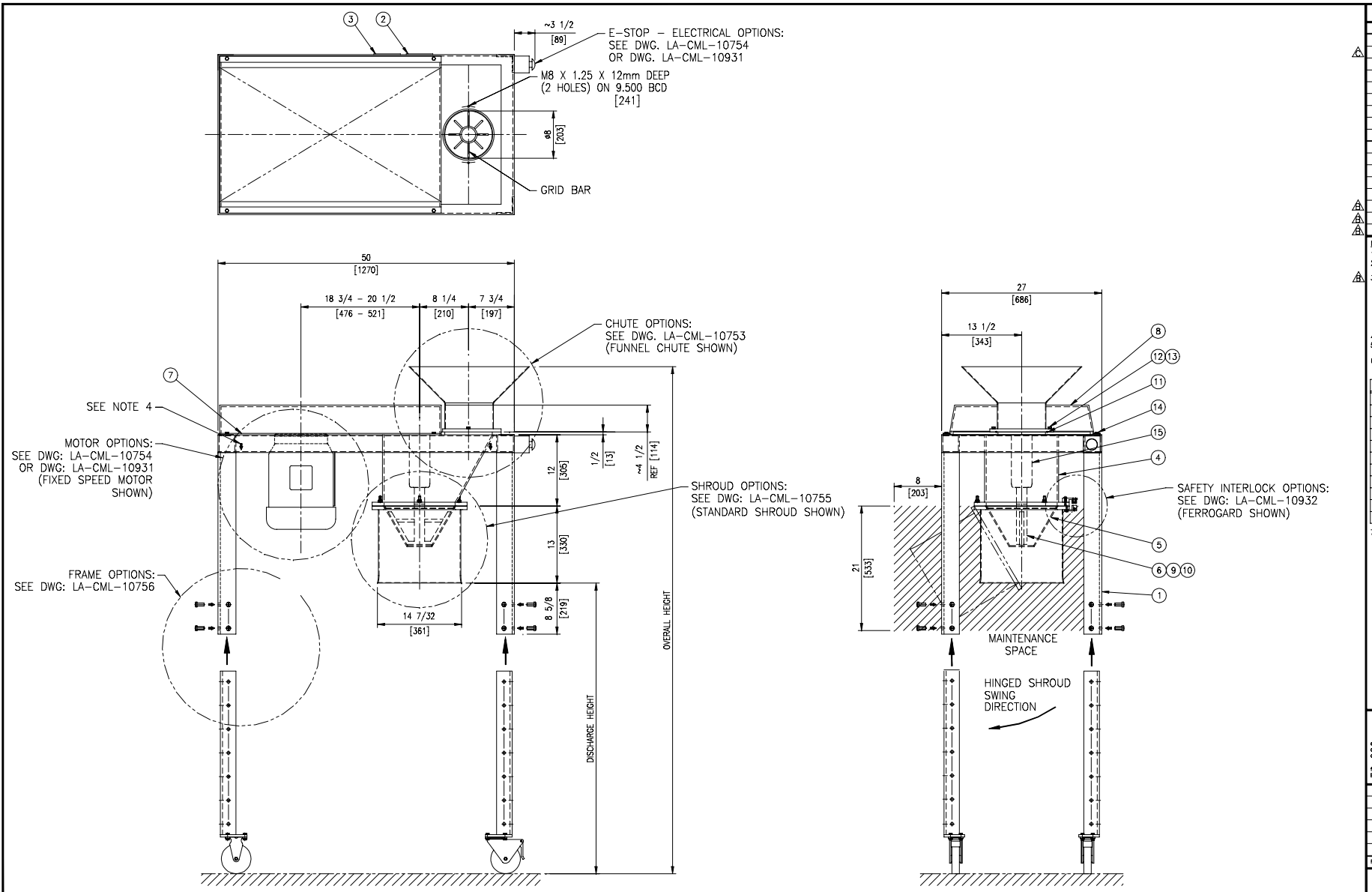

SELECT DESIRED CONTACT MATERIAL		
SELECT DESIRED CONTACT MATERIAL	OPTION SELECTION (MARK SELECTION WITH "X")	INITIALS (CONFIRM SELECTION WITH INITIALS)
STANDARD CONTACT MATERIAL 304 STAINLESS STEEL	☐	
UPGRADE CONTACT MATERIAL 316 STAINLESS STEEL	☐	

BILL OF MATERIAL

ITEM	QTY.	PART No.	DESCRIPTION
1	1	G96-01-10004	BASE
2	1	U20-01-10641	NAMEPLATE
3	1	196-01-10150	SCREEN GAP WARNING NAMEPLATE
4	1	196-02-10122LK	MACHINE HOUSING
5	REF		SCREEN 2F
6	REF		IMPELLER 2F
7	1	196-09-10043KK	MOTORMOUNT
8	1	196-13-10063KK	UPPER GUARD (BOLTED)
9	1	196-15-002	IMPELLER SPACER SET
10	1	100251	IMPELLER SCREW
11	1	106001	SILICONE INLET O-RING (SEE NOTE 5)
12	2	109500	HHCS M8 x 1.25 x 20 mm LG
13	2	109544	M8 FLAT WASHER
14	4	109510	UPPER GUARD BOLTS
15	1	196-03-10009	SPINDLE ASSEMBLY STANDARD
16	REF	196-19-10011	SPINDLE MAINTENANCE KIT (SEE NOTE 7)
17	REF	G96-19-10000	MISCELLANEOUS SPARES KIT (SEE NOTE 7)

NOTES:

1) IMPELLER MUST ROTATE CLOCKWISE WHEN VIEWED FROM THE TOP.
2) APPROXIMATE UNCRATED MACHINE WEIGHT WITH MOTOR 700 lbs OR 318 kg.
3) SPECIFIED MATERIAL AND FINISHES:
   CONTACT SURFACES: 304* SS, 150 GRIT (Ra 1.06µm)
   NON-CONTACT SURFACES: 304* SS, BEADBLAST, WELDS AS LAID, OR BETTER
   SCREEN(s): 316 SS, 150 GRIT (Ra 1.06µm)
   IMPELLER: 316 SS, 150 GRIT (Ra 1.06µm)
   * PLEASE NOTE THAT A HIGHER GRADE OF MATERIAL MAY BE SUBSTITUTED, FOR SOME OR ALL PARTS, BASED ON AVAILABILITY.
4) REFER TO LIFTING INSTRUCTIONS ON CRATE.
5) MATERIAL COMPLIES WITH THE REQUIREMENTS OF THE FDA 21 CFR 177.2600 "RUBBER ARTICLES INTENDED FOR REPEATED USE".
6) PLEASE REFER TO THE FOLLOWING LAYOUT DRAWINGS TO SELECT LISTED OPTIONS:

OPTION		DRAWING No.
CHUTE		LA-CML-10753
NA	SAFETY INTERLOCK	LA-CML-10932
NA	MOTOR	LA-CML-10754
NA	PLANT ELECTRICAL SUPPLY	LA-CML-10754
NA	NO-LOAD IMPELLER RPM (FOR FIXED SPEED)	LA-CML-10754
CE	SAFETY INTERLOCK	LA-CML-10932
CE	MOTOR	LA-CML-10931
CE	PLANT ELECTRICAL SUPPLY	LA-CML-10931
CE	NO-LOAD IMPELLER RPM (FOR FIXED SPEED)	LA-CML-10931
SHROUD		LA-CML-10755
FRAME AND DISCHARGE HEIGHT		LA-CML-10756

7) THIS KIT WAS NOT ORDERED. PART No. PROVIDED FOR FUTURE REFERENCE ONLY.

THIS DRAWING IS THE PROPERTY
OF QUADRO ENGINEERING INCORPORATED

This drawing is loaned without other consideration than the agreement and condition that it is not to be reproduced, copied or otherwise disposed of, directly or indirectly, and is not to be used in whole or in part to assist in making or to furnish any information for the making of drawings, prints, apparatus, or parts thereof.

The acceptance of this drawing will be construed as an acceptance of the foregoing conditions and as an admission of the exclusive ownership of QUADRO ENGINEERING INCORPORATED in and to the drawing.

REV.	DESCRIPTION	CHK.	BY	DATE
C	REVISED NAMEPLATE		DVB	05 OCT 06
B	UPDATED TO NEW STANDARD		ESB	23 JUN 06
A	CHANGED MODEL NUMBER		DVB	13 JAN 06

SECURITY OF INFORMATION & PROPRIETY
IS GOOD BUSINESS
FOR BOTH OF US
QUADRO SUBSCRIBES TO THIS CODE OF ETHICS

QUADRO ENGINEERING INC
813 COLBY DRIVE, WATERLOO, ONTARIO, CANADA

TITLE: COMIL G96

REF DWG No.	CHECKED BY:	SCALE:	REV.
		1:8	C
DRAWING No. LA-CML-10752	DATE: 14 APR 04	DRAWN BY: DLS	